## FEATURES

* Low forward voltage drop
* High current capability
* High reliability
* High surge current capability
* Epitaxial construction

VOLTAGE RANGE
45 to 200 Volts
CURRENT
2 0 Ampere

## MECHANICAL DATA

* Case: Molded plastic
* Epoxy: UL 94V-0 rate flame retardant
* Lead: Lead solderable per MIL-STD-202, method 208 guranteed
* Polarity: As Marked
* Mounting position: Any
* Weight: 2.24 grams

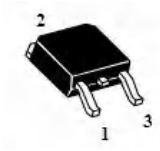


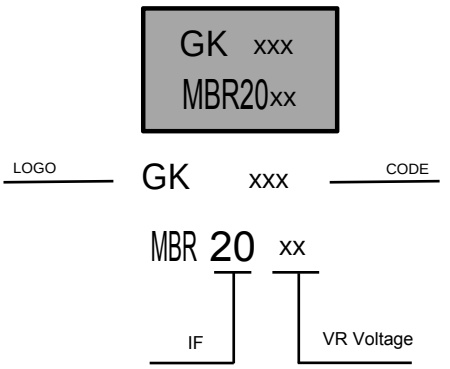


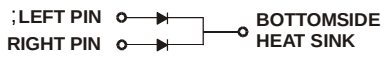


## MAXIMUM RATINGS AND ELECTRICAL CHARACTERISTICS

Rating 25℃ ambient temperature uniess otherwies specified.
Single phase half wave, 60Hz, resistive or inductive load.
For capacitive load, derate current by 20%.

| TYPE NUMBER | MBRD 2045 | MBRD 2060 | MBRD 20100 | MBRD 20150 | MBRD 20200 | UNITS |
|---|---|---|---|---|---|---|
| Maximum Recurrent Peak Reverse Voltage | 45 | 60 | 100 | 150 | 200 | V |
| Maximum RMS Voltage | 32 | 42 | 70 | 105 | 140 | V |
| Maximum DC Blocking Voltage | 45 | 60 | 100 | 150 | 200 | V |
| Maximum Average Forward Rectified Current .375"(9.5mm) Lead Length at Tc=100℃ | 20 | | | | | A |
| Peak Forward Surge Current, 8.3 ms single half sine-wave superimposed on rated load (JEDEC method) | 175 | | | | | A |
| Maximum Instantaneous Forward Voltage at 20A | 0.6 | 0.75 | 0.85 | 0.90 | | V |
| Maximum DC Reverse Current Ta=25℃ | 0.1 | | 0.02 | | | mA |
| at Rated DC Blocking Voltage Ta=125℃ | 5 | | 2 | | | mA |
| Typical Junction Capacitance (Note1) | 500 | | | | | pF |
| Typical Thermal Resistance R JA (Note 2) | 8 | | | | | ℃/W |
| Operating Temperature Range $T_J$ | -55 — +150 | | | | | ℃ |
| Storage Temperature Range $T_{STG}$ | -55 — +150 | | | | | ℃ |

**NOTES:**

1. Measured at 1MHz and applied reverse voltage of 4.0V D.C.

2. Thermal Resistance Junction to Ambient Vertical PC Board Mounting 0.5"(12.7mm) Lead Length.

## RATING AND CHARACTERISTIC CURVES

### FIG.1-TYPICAL FORWARD CURRENT DERATING CURVE

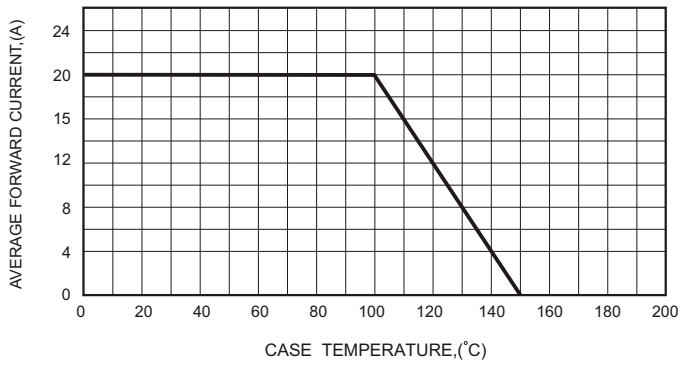


### FIG.2-TYPICAL FORWARD CHARACTERISTICS

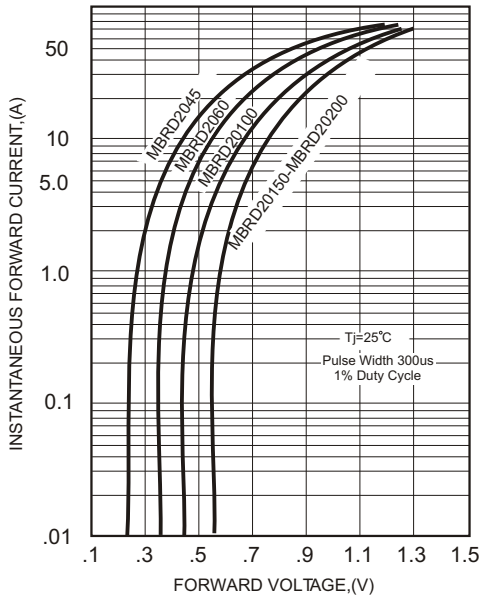


### FIG.3-MAXIMUM NON-REPETITIVE FORWARD SURGE CURRENT

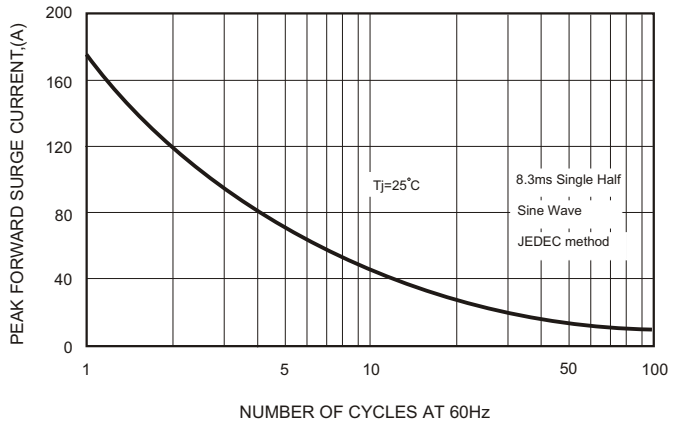


### FIG.5 - TYPICAL REVERSE CHARACTERISTICS

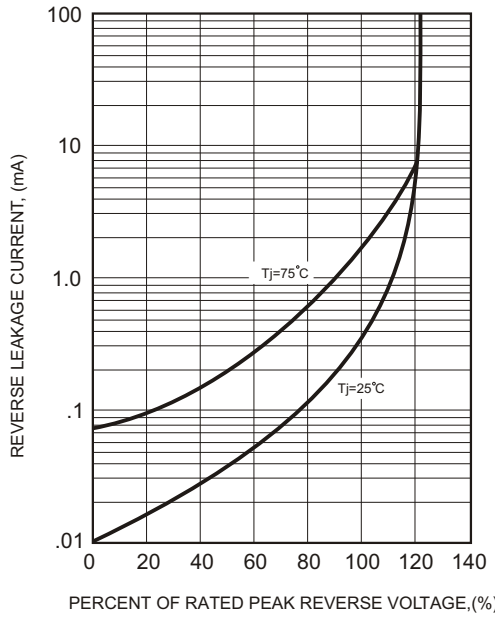


### FIG.4-TYPICAL JUNCTION CAPACITANCE

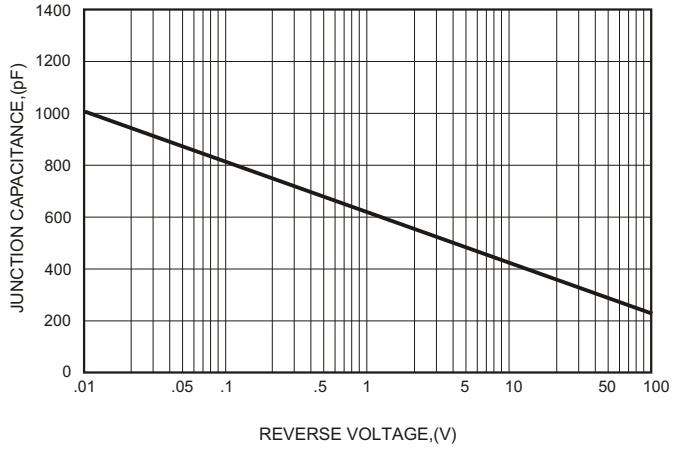

## Soldering parameters

| Reflow Condition | | Pb-Free assembly (see as bellow) |
|---|---|---|
| Pre Heat | -Temperature Min ($T_{s(min)}$) | +150℃ |
| | -Temperature Max($T_{s(max)}$) | +200℃ |
| | -Time (Min to Max) (ts) | 60-180 secs. |
| Average ramp up rate (Liquid us Temp ($T_L$) to peak) | | 3℃/sec. Max |
| $T_{s(max)}$ to $T_L$ - Ramp-up Rate | | 3℃/sec. Max |
| Reflow | -Temperature($T_L$)(Liquid us) | +217℃ |
| | -Temperature($t_L$) | 60-150 secs. |
| Peak Temp ($T_p$) | | +260(+0/-5)℃ |
| Time within 5℃ of actual Peak Temp ($t_p$) | | 30 secs. Max |
| Ramp-down Rate | | 6℃/sec. Max |
| Time 25℃ to Peak Temp ($T_P$) | | 8 min. Max |
| Do not exceed | | +260℃ |

**FIG5:** Reflow condition

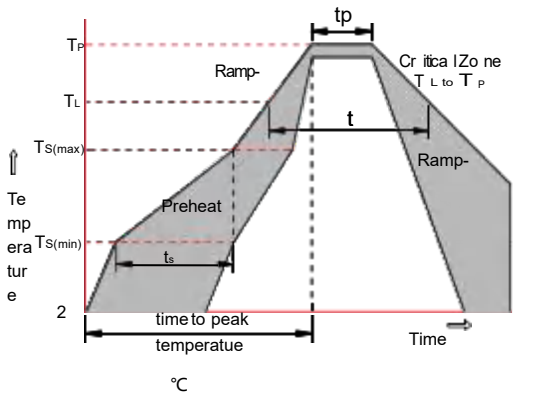


## Package Dimensions & Suggested Pad Layout

TO-252

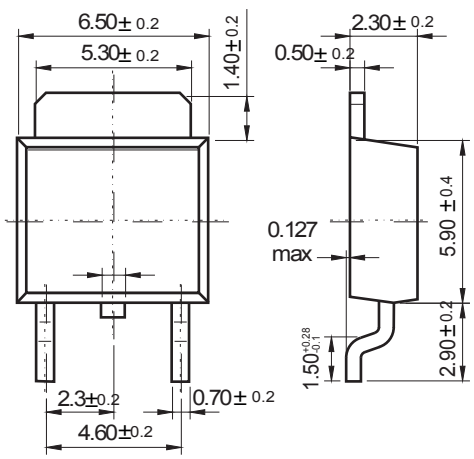


Dimensions in inches and (millimeters)

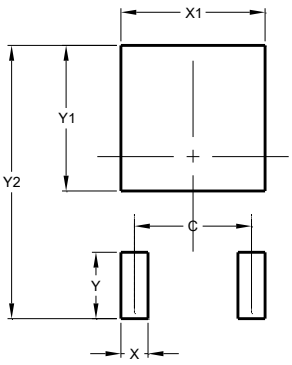


| Dimensions | Value (in mm) |
|---|---|
| C | 4.55 |
| X | 1.50 |
| X1 | 5.80 |
| Y | 2.70 |
| Y1 | 6.00 |
| Y2 | 10.90 |

## Tape & rell specification

Tape

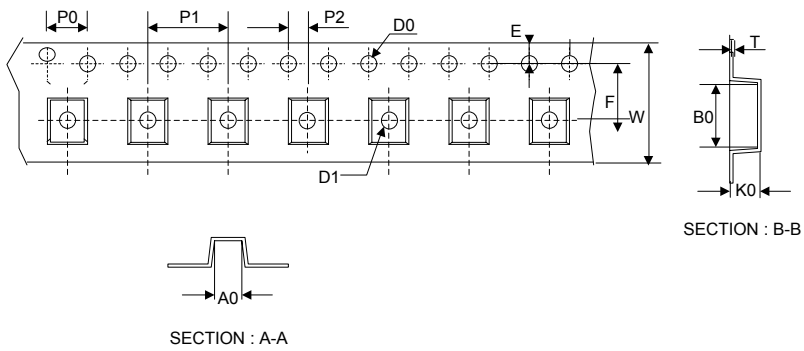


| Symbol | Dimension (mm) |
|---|---|
| P0 | 4.00±0.20 |
| P1 | 8.00±0.20 |
| P2 | 2.00±0.20 |
| D0 | 1.55±0.15 |
| D1 | 1.55±0.20 |
| E | 1.75±0.20 |
| F | 7.50±0.20 |
| W | 16.00±0.20 |
| A0 | 7.10±0.20 |
| B0 | 10.50±0.20 |
| K0 | 2.70±0.20 |
| T | 0.30±0.10 |

13” Reel

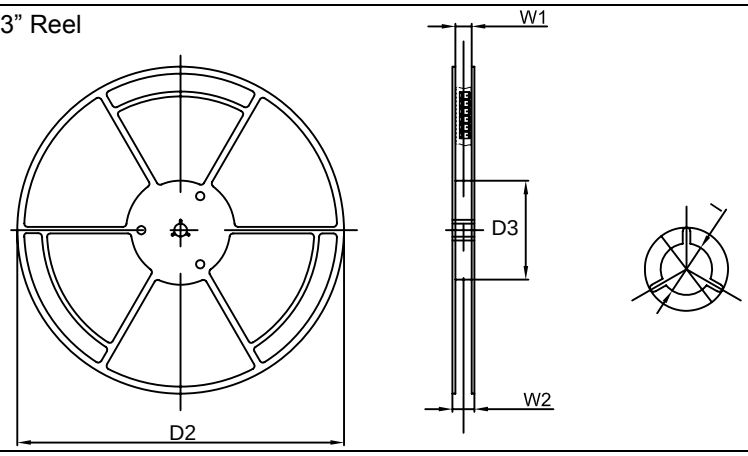


| | |
|---|---|
| D2 | 330.0±5.0 |
| D3 | 100.0±4.0 |
| W1 | 20.0±5.0 |
| W2 | 25.0±5.0 |
| I | 13.0±2.0 |

Quantity: 2500PCS